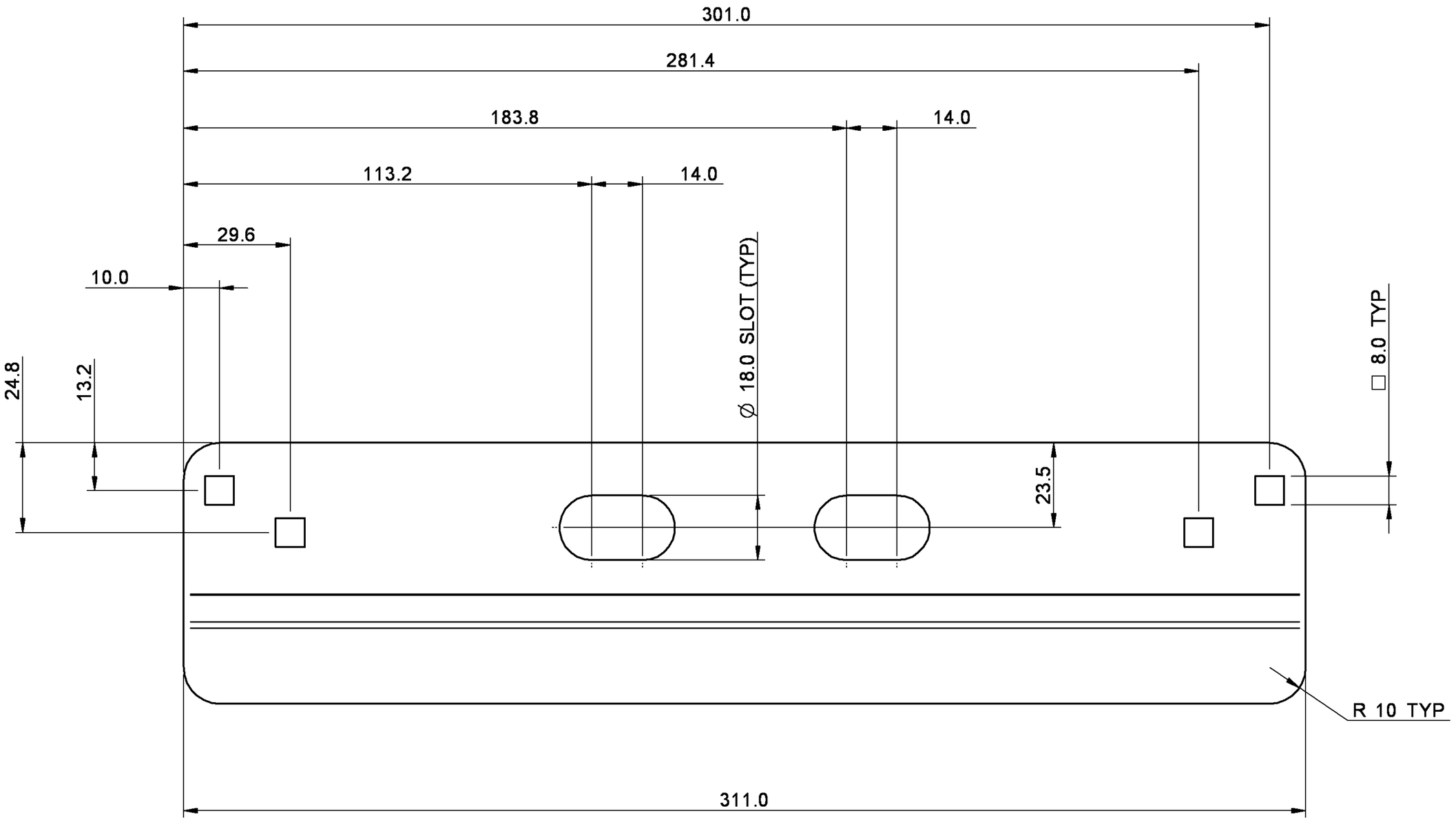

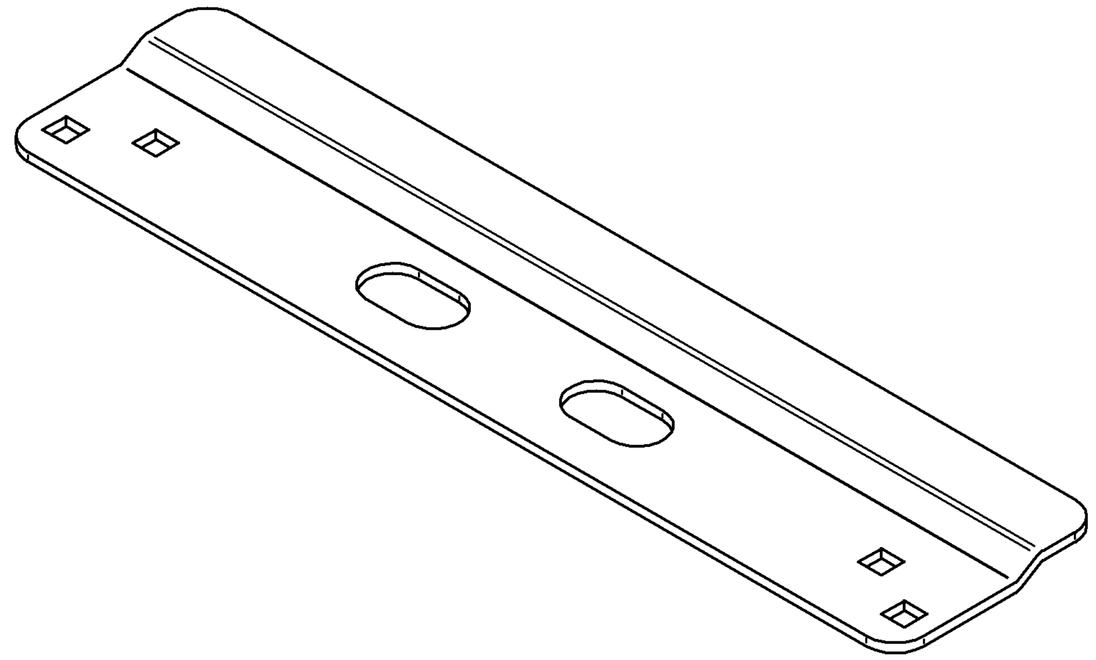

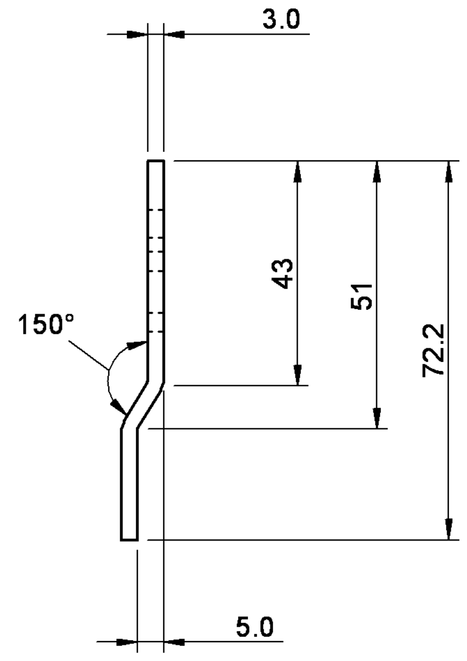

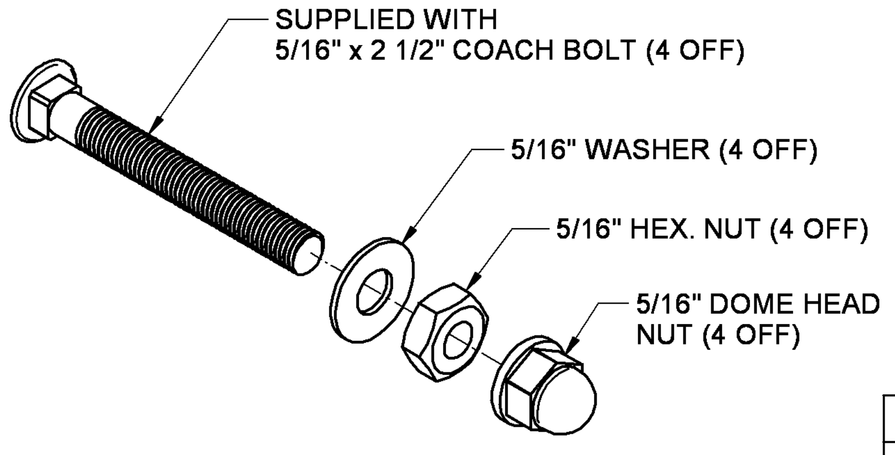

ISS.	C.R.No.	ZONE	AMENDMENTS	BY	DATE
0	-	-	NEW ISSUE	JN	31/10/06

GENERAL TOLERANCE UNLESS OTHERWISE STATED

LINEAR DIMENSIONS ± 0.5mm

ANGULAR DIMENSIONS ± 0.5 °

GEOMETRY TOLERANCING TO AS1100

PROT.	PROD.	SALES	IND. ENG
		DO NOT SCALE	

DIMENSIONS IN MILLIMETRES

© ADI SECURITY PRODUCTS

THE DESIGN AND OTHER INFORMATION IS IMPARTED ONLY FOR THE PURPOSE FOR WHICH IT IS SUPPLIED. NO OTHER USE OR ANY REPRODUCTION, COPYING OR COMMUNICATION IS PERMITTED WITHOUT THE WRITTEN PERMISSION OF ADI SECURITY PRODUCTS.

ITEM	PART No.	DRG No.	DESCRIPTION	QTY

ADI
SECURITY PRODUCTS

DESCRIPTION
LATCHGUARD

DRAWN	J.NEAL	DATE	26.10.06	MATERIAL AND FINISH	3MM M.S.
CHECKED		QTY	1 OFF	SCALE	NTS
APPROVED		REF	SE18	NEXT ASSY	

A892-590

SHEET 1 OF 1

A2