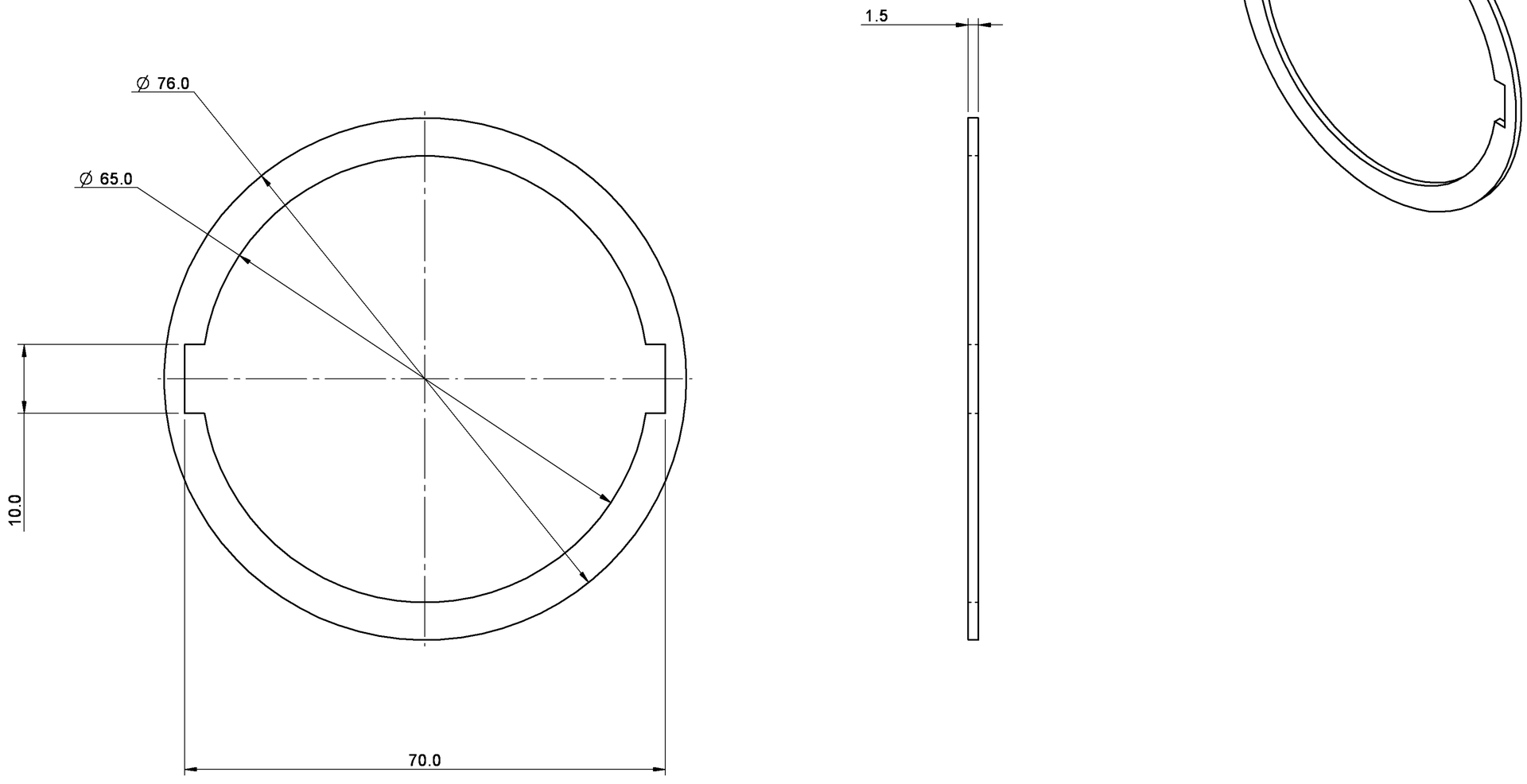

0	-	-	NEW ISSUE	JN	25/10/06
ISS.	C.R.No.	ZONE	AMENDMENTS	BY	DATE

GENERAL TOLERANCE UNLESS OTHERWISE STATED

LINEAR DIMENSIONS ± 0.5mm

ANGULAR DIMENSIONS ± 0.5 °

GEOMETRY TOLERANCING TO AS1100

PROT.	PROD.	SALES	IND. ENG
		DO NOT SCALE	

DIMENSIONS IN MILLIMETRES

© ADI SECURITY PRODUCTS

THE DESIGN AND OTHER INFORMATION IS IMPARTED ONLY FOR THE PURPOSE FOR WHICH IT IS SUPPLIED. NO OTHER USE OR ANY REPRODUCTION, COPYING OR COMMUNICATION IS PERMITTED WITHOUT THE WRITTEN PERMISSION OF ADI SECURITY PRODUCTS.

ITEM	PART No.	DRG No.	DESCRIPTION	QTY

ADI
SECURITY PRODUCTS

DESCRIPTION: S/S RING

DRAWN	J.NEAL	DATE	25.10.06	MATERIAL AND FINISH	-
CHECKED		QTY	1 OFF	SCALE	2:1
APPROVED		REF	SE18	NEXT ASSY	

80DSS

SHEET 1 OF 1

A2